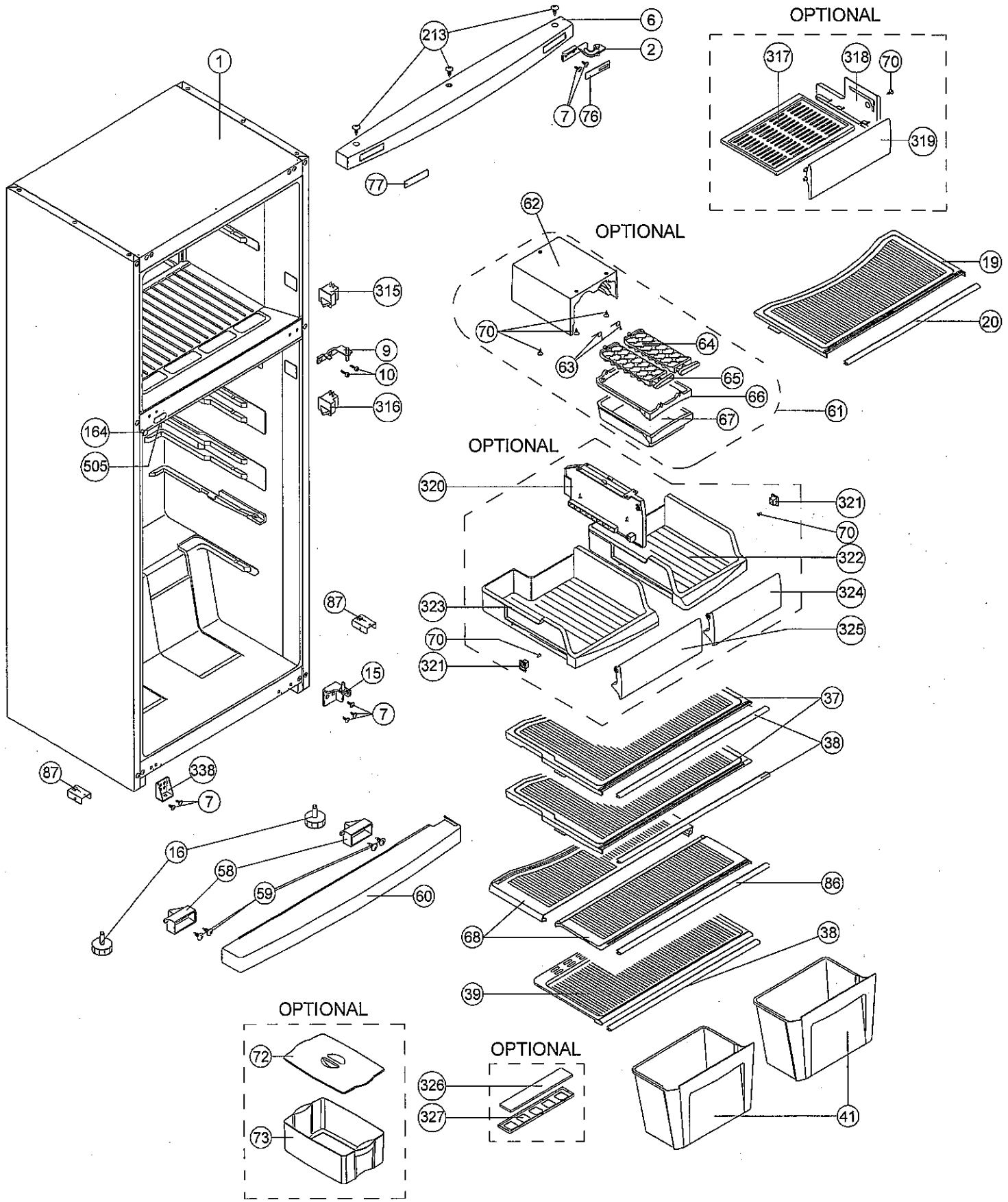

NOTE : On this exploded view, standard accessories drawings are used. According to your product, some changes may became on the accessories.

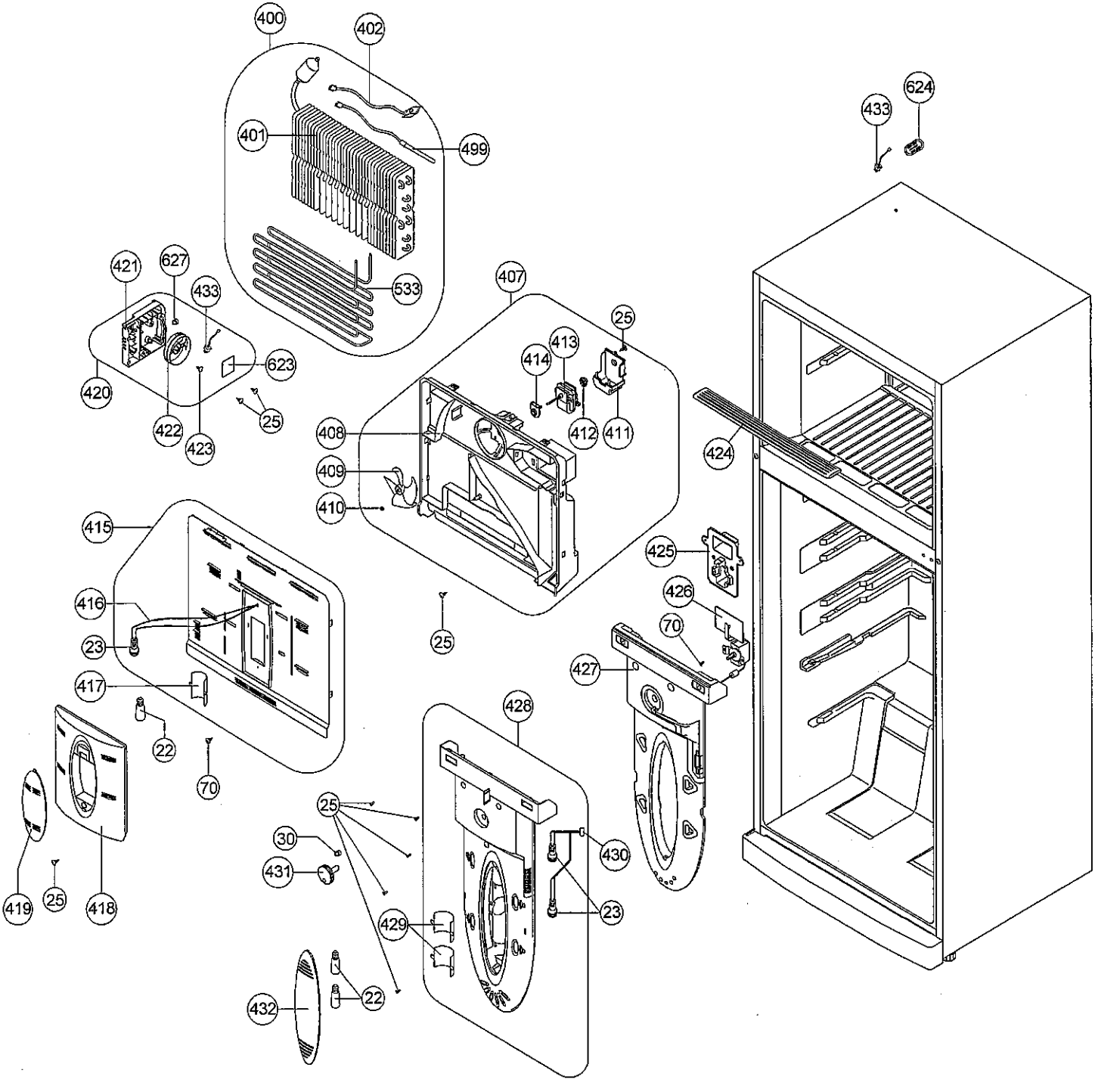
400
402
401
499
533
624
433
421
627
433
623
420
422
423
25
407
25
413
414
412
411
408
409
410
424
415
425
416
426
23
70
25
427
417
428
22
70
25
30
430
431
419
25
418
23
429
22
432

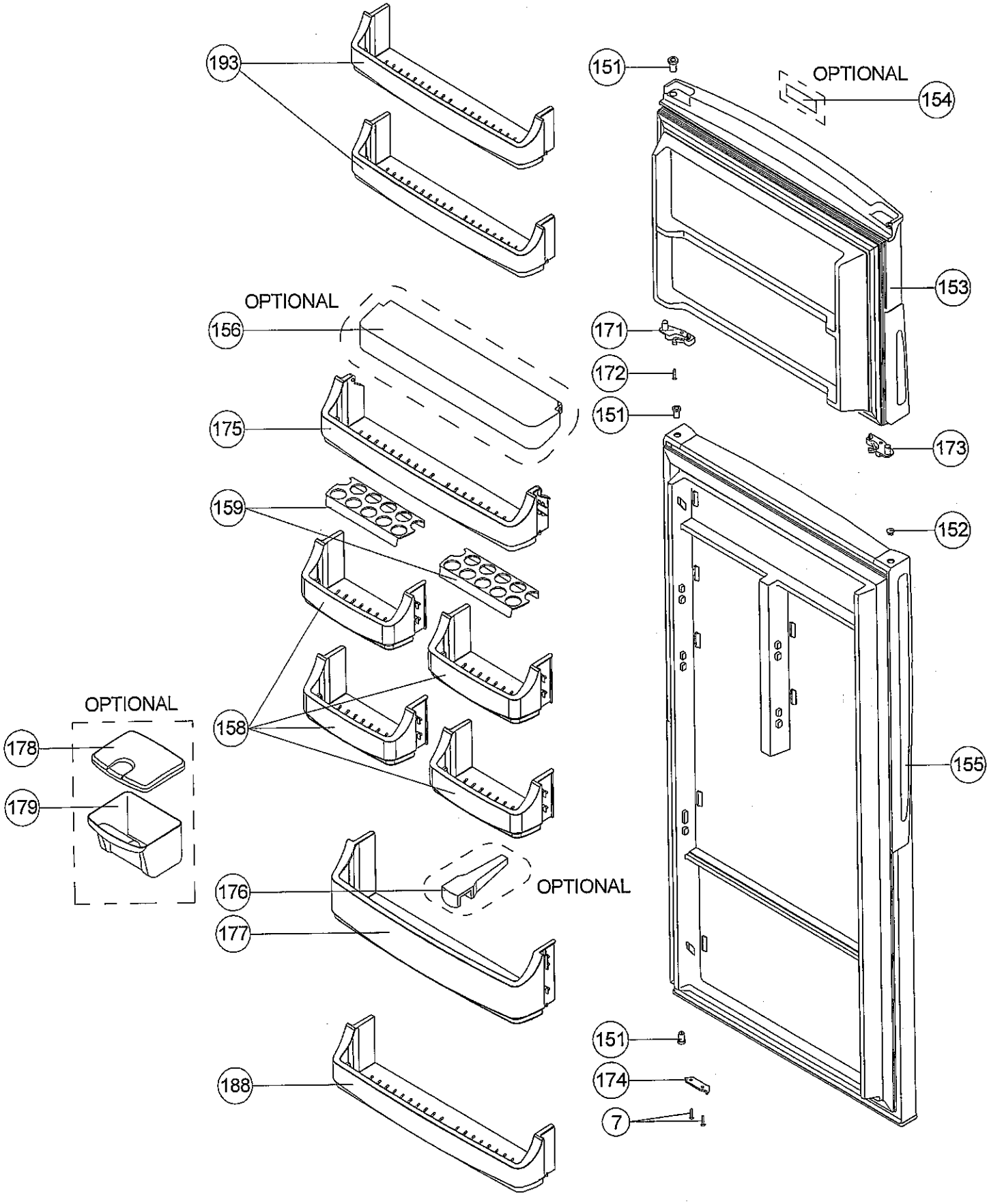
193
151
OPTIONAL
154
153
OPTIONAL
156
171
172
151
175
173
159
152
158
155
OPTIONAL
178
179
176
OPTIONAL
177
151
188
174
7

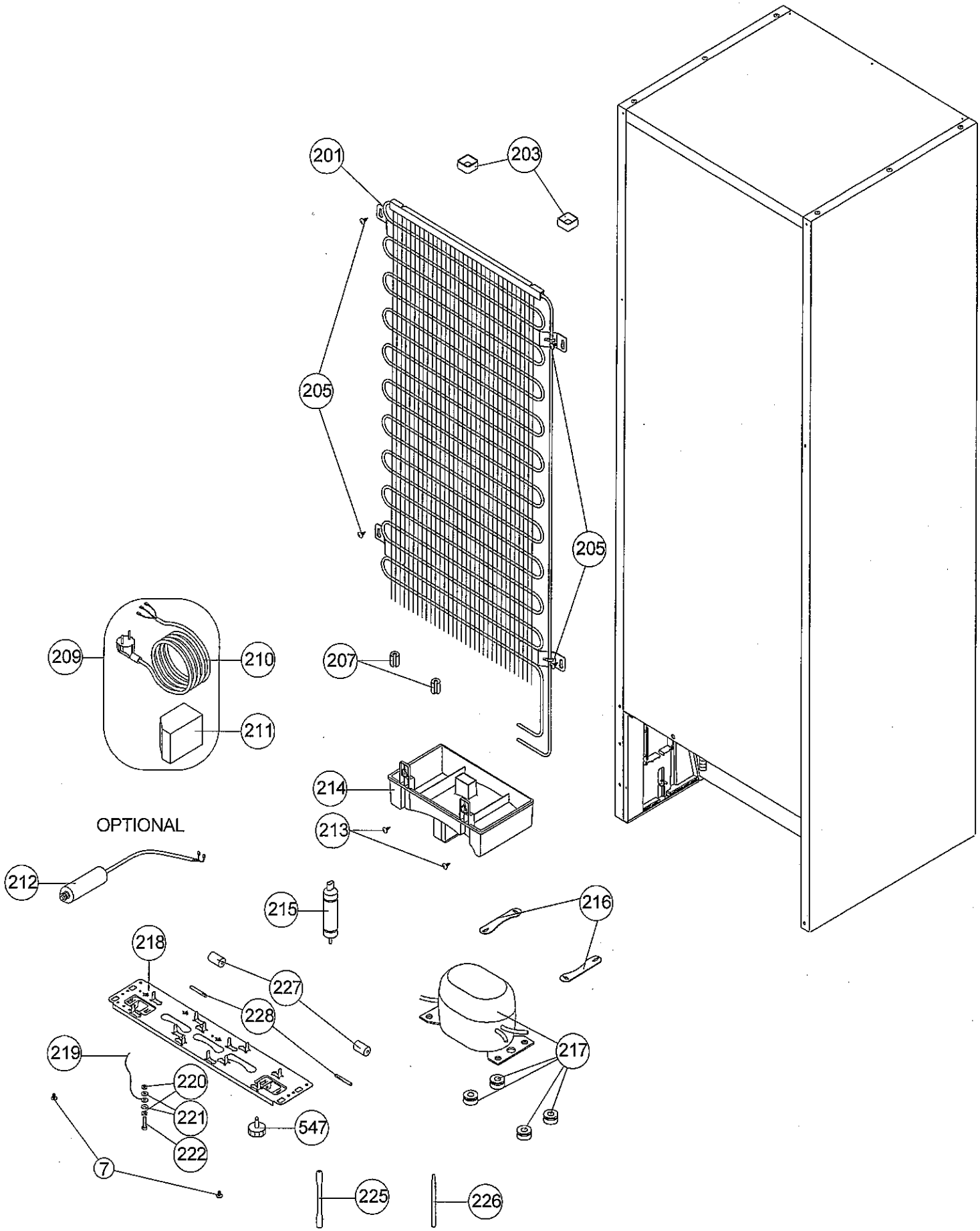
201
203
205
205
209
210
211
207
214
213
OPTIONAL
212
215
216
218
227
228
219
220
221
222
217
547
7
225
226